I GROUND POINT (LHD)

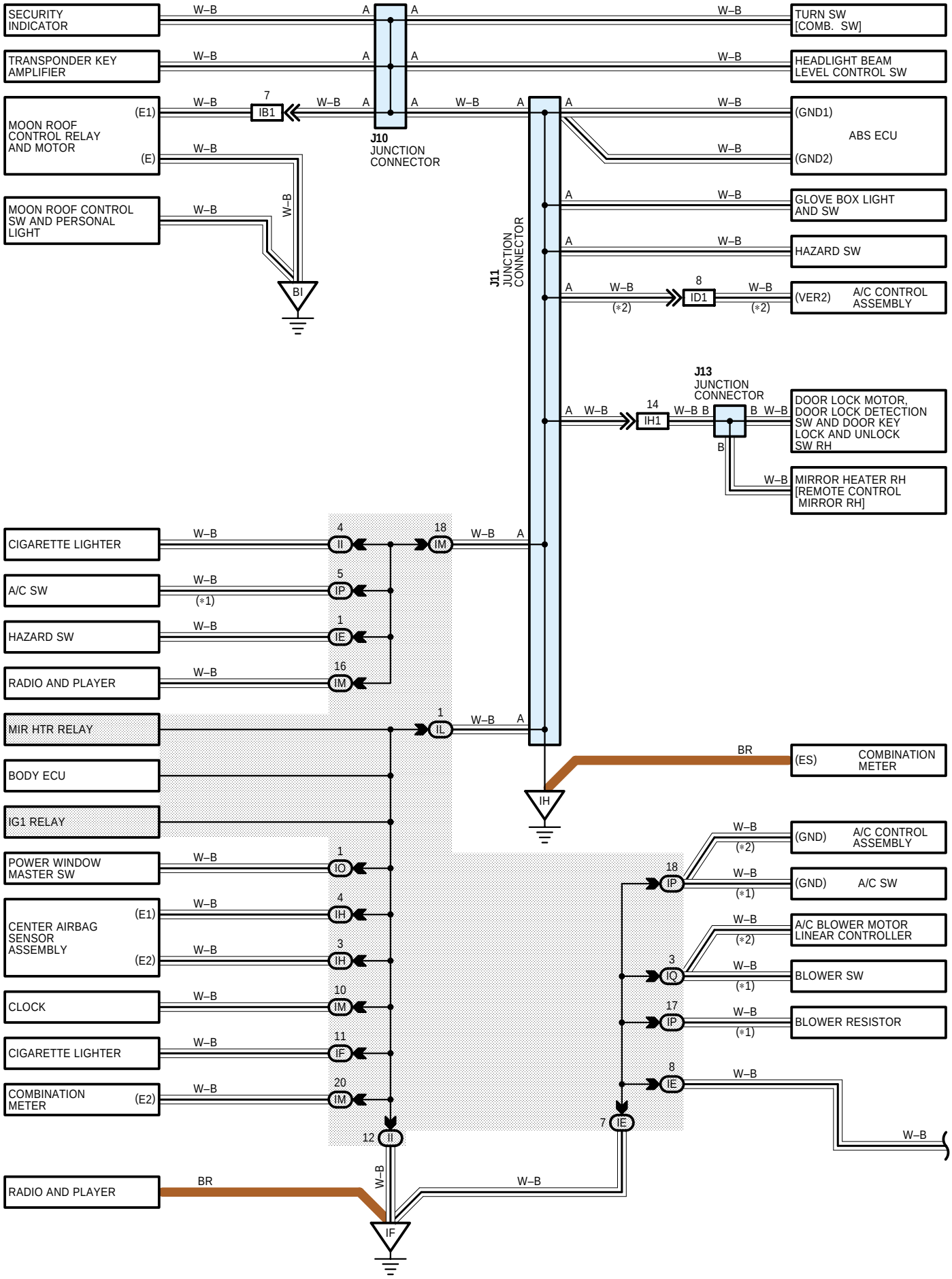

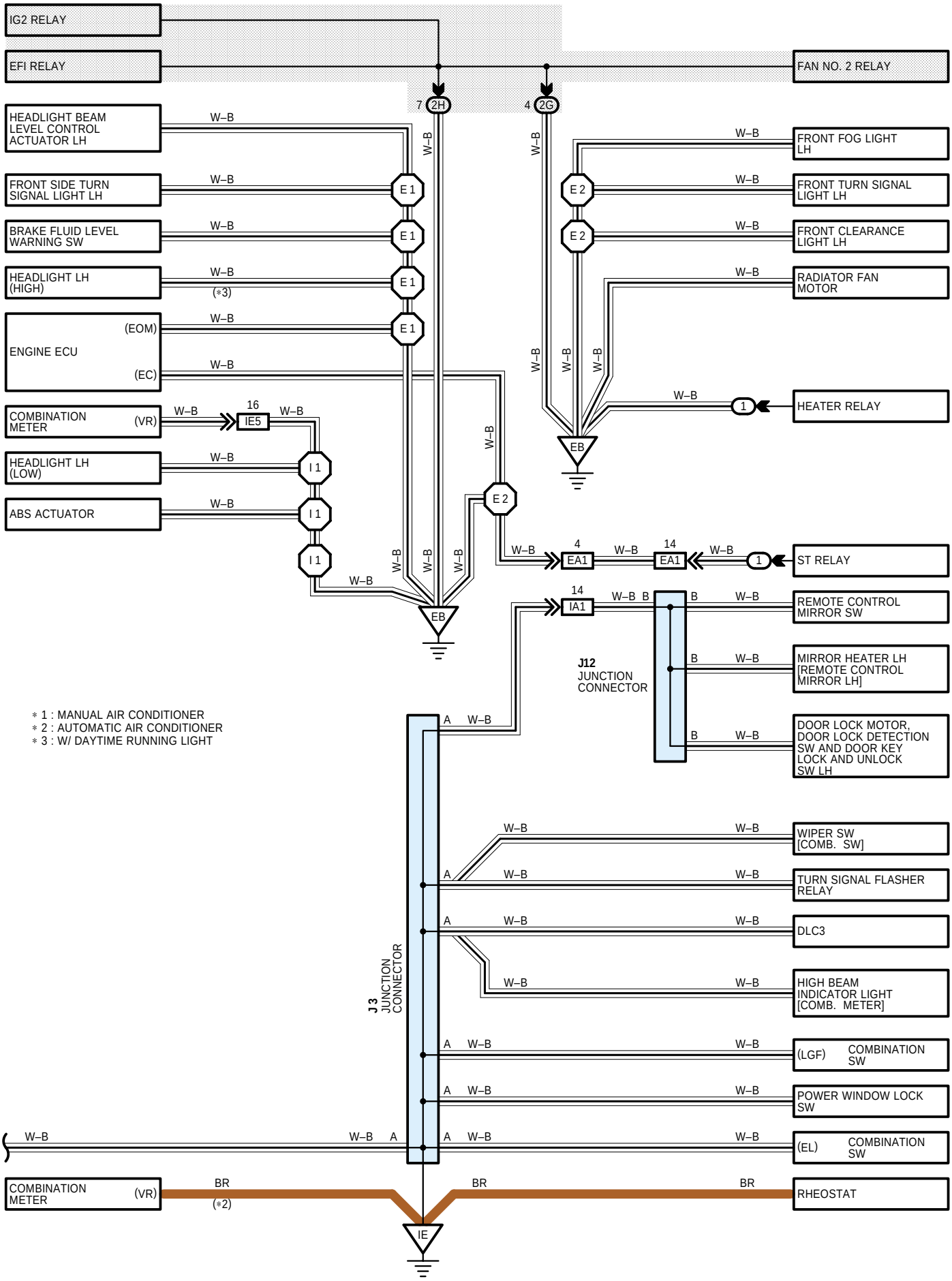
IG2 RELAY
EFI RELAY
FAN NO. 2 RELAY
7 2H
4 2G
HEADLIGHT BEAM LEVEL CONTROL ACTUATOR LH
FRONT SIDE TURN SIGNAL LIGHT LH
BRAKE FLUID LEVEL WARNING SW
HEADLIGHT LH (HIGH)
(*3)
ENGINE ECU
(EOM)
(EC)
COMBINATION METER (VR)
16 IE5
HEADLIGHT LH (LOW)
ABS ACTUATOR
E 1
E 2
I 1
EB
FRONT FOG LIGHT LH
FRONT TURN SIGNAL LIGHT LH
FRONT CLEARANCE LIGHT LH
RADIATOR FAN MOTOR
HEATER RELAY
ST RELAY
4 EA1
14 EA1
14 IA1
REMOTE CONTROL MIRROR SW
MIRROR HEATER LH [REMOTE CONTROL MIRROR LH]
J12 JUNCTION CONNECTOR
DOOR LOCK MOTOR, DOOR LOCK DETECTION SW AND DOOR KEY LOCK AND UNLOCK SW LH
* 1 : MANUAL AIR CONDITIONER
* 2 : AUTOMATIC AIR CONDITIONER
* 3 : W/ DAYTIME RUNNING LIGHT
WIPER SW [COMB. SW]
TURN SIGNAL FLASHER RELAY
DLC3
HIGH BEAM INDICATOR LIGHT [COMB. METER]
J3 JUNCTION CONNECTOR
(LGF) COMBINATION SW
POWER WINDOW LOCK SW
(EL) COMBINATION SW
COMBINATION METER (VR)
(*2)
RHEOSTAT
IE
W–B
BR

I GROUND POINT (LHD)

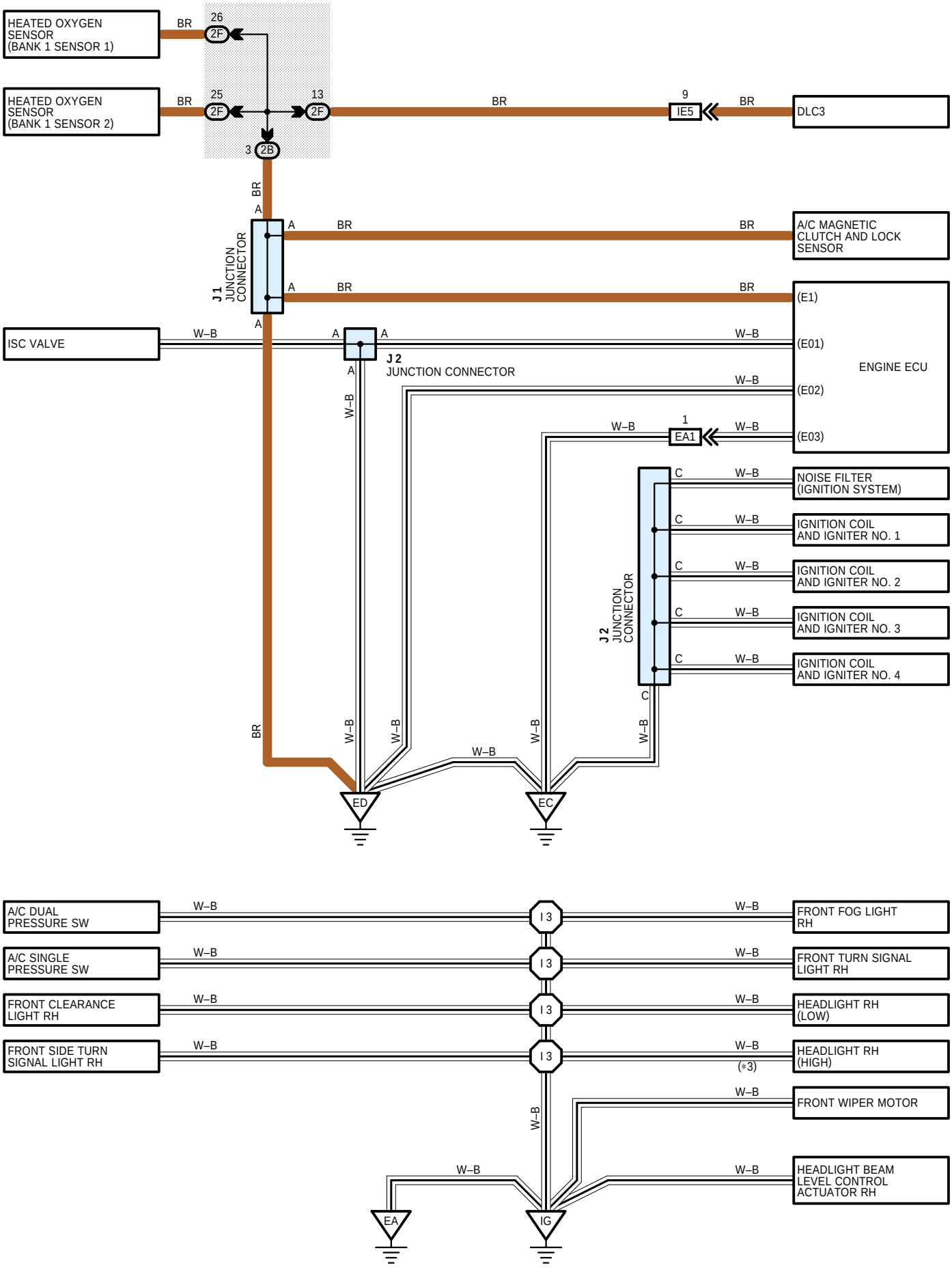

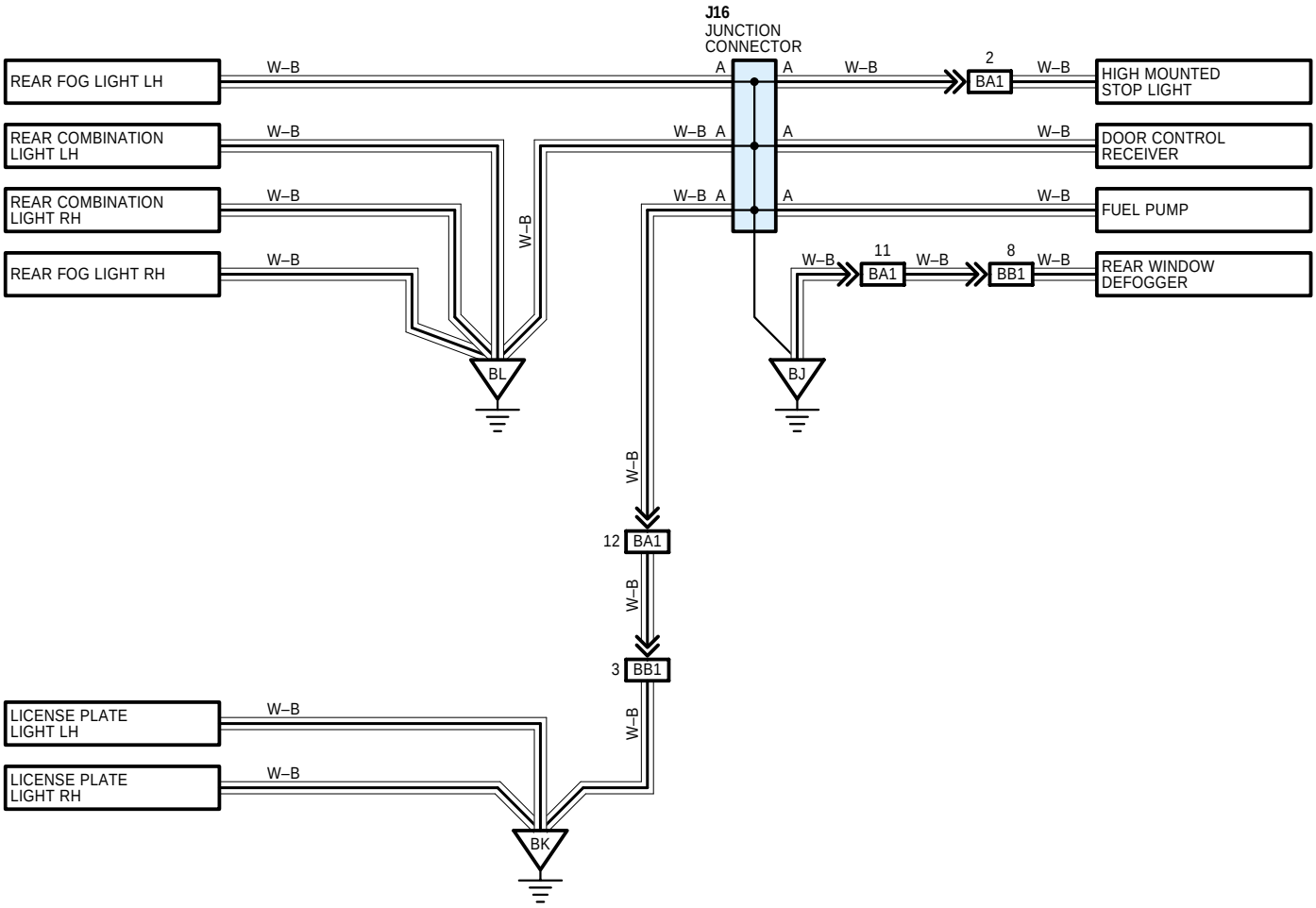
J16
JUNCTION
CONNECTOR
REAR FOG LIGHT LH
REAR COMBINATION
LIGHT LH
REAR COMBINATION
LIGHT RH
REAR FOG LIGHT RH
W–B
A
2
BA1
HIGH MOUNTED
STOP LIGHT
DOOR CONTROL
RECEIVER
FUEL PUMP
11
8
BB1
REAR WINDOW
DEFOGGER
BL
BJ
12
3
LICENSE PLATE
LIGHT LH
LICENSE PLATE
LIGHT RH
BK